ENGINE, CRANKSHAFT AND BEARINGS - Z26SPD92AN/AH/BN/BH (C750272)

2026 RZR - RZR PRO S ULTIMATE (R01) - Z26SPD92AN/AH/BN/BH

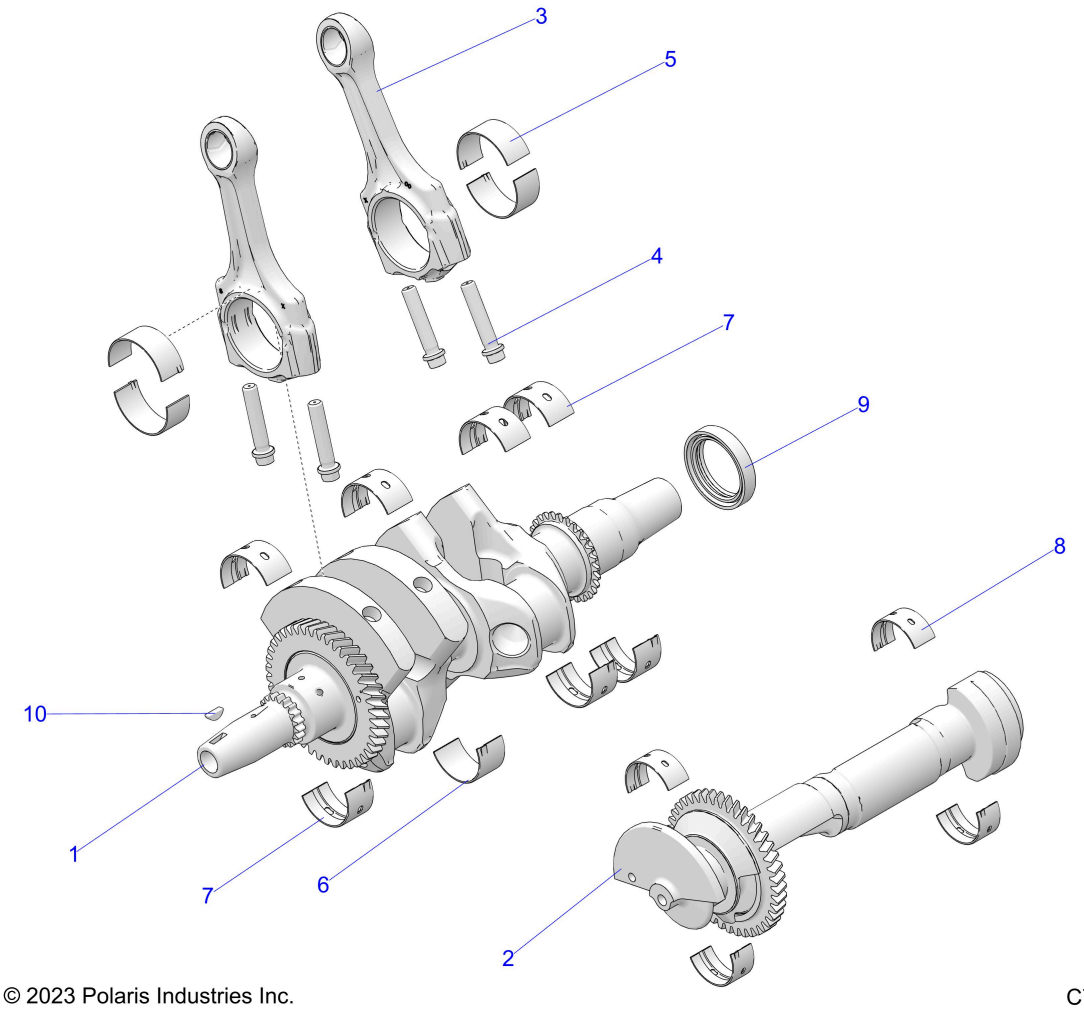

© 2023 Polaris Industries Inc. C750272

Reference #	*Part#*	*Description*	*Quantity*
1	3024055	ASM., CRANKSHAFT V270	1
2	1206287	ASM., BALANCE SHAFT	1
3	3024356	ASM-ROD,CONNECTING,2 [INCL. 4]	1
4	7520356	BOLT-CONROD MJ9X1.0X44	1
5	3515815-053	BEARING-CON ROD,YELLOW	4
5	3515815-027	BEARING-CON ROD,BLUE	4
5	3515815-016	BEARING-CON ROD,WHITE	4
5	3515815-015	BEARING-CON ROD,RED	4
6	3514803-002	BEARING-MAIN,CNTR,LWR BLU	1
6	3514803-003	BEARING-MAIN,CNTR,LWR,GREEN	1
6	3514803-004	BEARING-MAIN,CNTR,LWR,YELLOW	1
7	3514662-001	BEARING-MAIN,G-90,41MM	7
7	3514662-002	BEARING-MAIN,G-90,41MM,BLU	7
7	3514662-003	BEARING-MAIN,G-90,41MM,GRN	7
7	3514662-004	BEARING-MAIN,G-90,41MM,YLW	7
7	3514662-005	BEARING-MAIN,G-90,41MM,RED	7
8	3514756	BEARING-BAL SHAFT,38X41X17.5	4
9	3610284	SEAL-CRANKSHAFT	1

10	7721122	KEY-WOODRUFF,4X5	1

Copyright 1996-2026 Polaris Industries U.S.A All rights reserved.